PSi ARTEMIS DUAL MOTOR SYSTEM SCHEMATIC

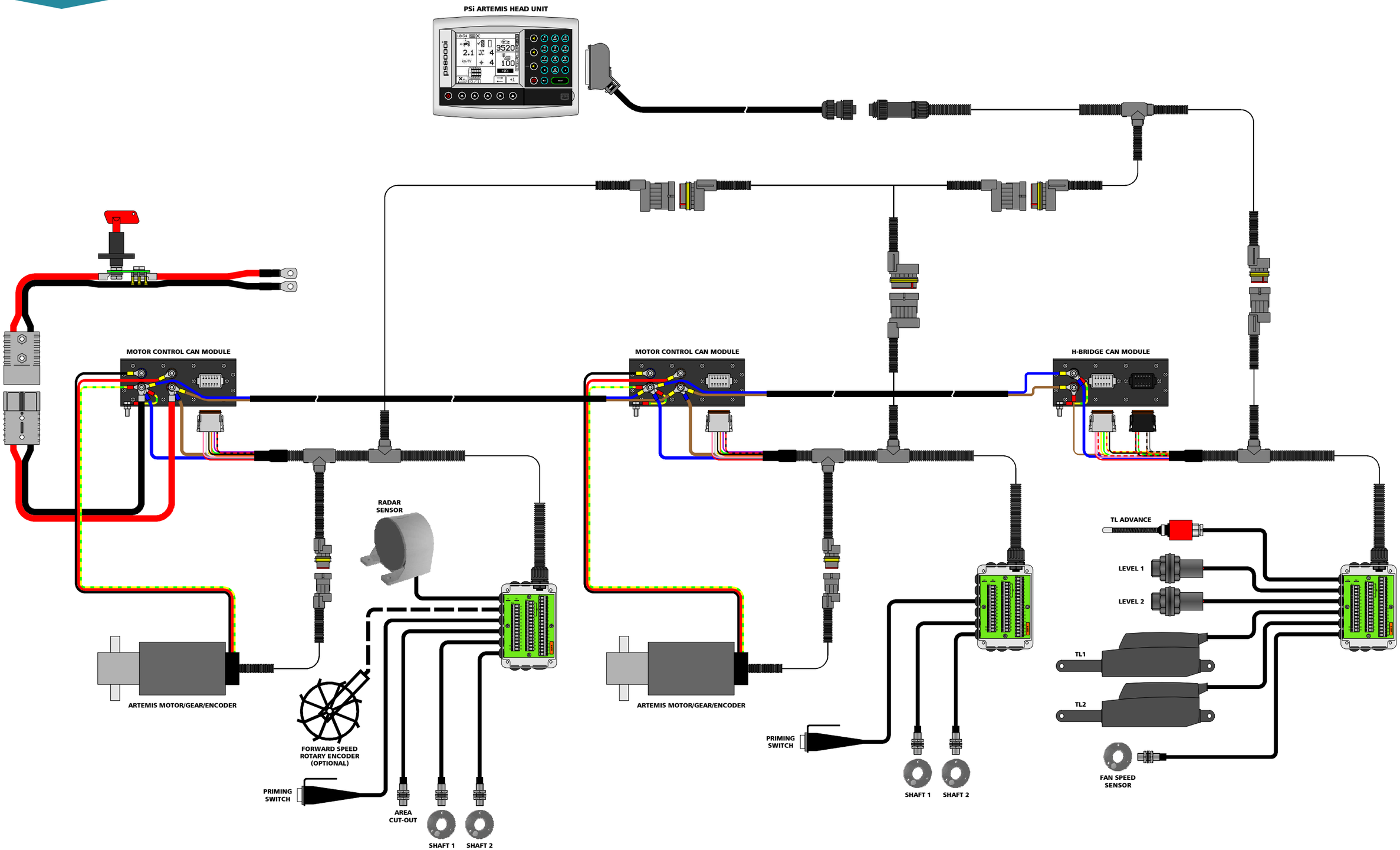

This is an example schematic! RDS can customise the solution to meet with your specific requirements